# DPA2G9LS2FT or 2U

## DEEPCEL *plus*

2′ X 2′ RECESSED FLUORESCENT
3′′ DEEP, 9 CELL PARABOLIC LOUVER
STATIC OR AIR SUPPLY / RETURN
2-LAMP, TT5 OR 1 5/8′′U LAMP T8

- 5" deep body.
- 74.3% efficient (2 lamp TT5).
- Clean contoured interior.
- Eyeleted heat removal vents in fixture ends.
- One-piece housing.
- Black exterior for cooler ballast operating temperature.
- Hemmed over side rails for safe handling.
- Fixture ends turned-in for safe handling.
- Built-in Hold-Down clip (patent no. 5,072,344).
- Pre-anodized aluminum parabolic louver.
- Vertical grain louver eliminates reflected lamp images on cross baffle.
- Spring-loaded rooster head latches.
- 18 gauge steel hinges.
- Louver frame with integral positive light stop.
- Louver has protective film dust guard.

## MOUNTING METHODS/FEATURES

**G** **exposed T-grid ceiling.**

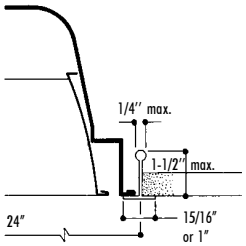


**T** **exposed slot T-grid ceiling.**

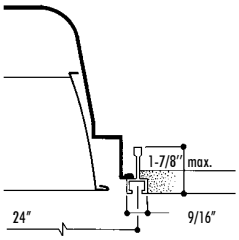


**T** **direct concealed two directional T-grid ceiling. (see options for splay trim.)**

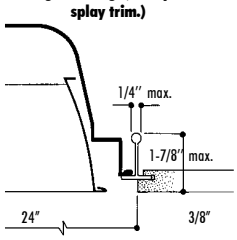


**drywall kit. (See options)**

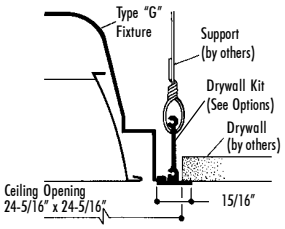


## DIMENSIONS

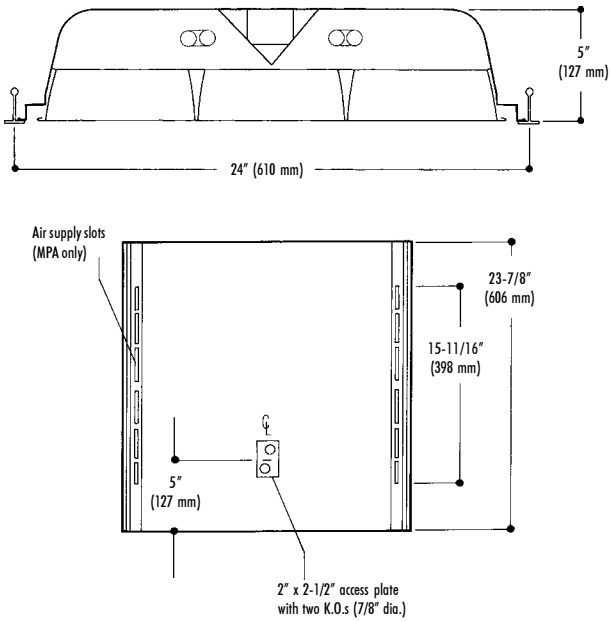


| FIXTURE TYPE | VOLTS |
|---|---|
| | |
| | |
| | |

JOB INFORMATION: _____

FLUORESCENT

# DPA2G9LS2FT or 2U

## DEEPCEL *plus*
## 2′ X 2′ RECESSED FLUORESCENT

**MODEL NO. DPA2G9LS2FT**

Luminaire Efficacy Rating
LER-58.8 Watts-68.5 BF-0.86

TESTING LABORATORY

45 Industrial Way
Wilmington, MA 01887
(978) 657-7600

```
REPORT NO.:      G00061                          DATE:  03-30-2000
CATALOG NO.:     DPA2G9LS2FT120SB
LAMP(S):         2 F40/30BX/SPX35, EACH RATED   3150  LUMENS.
LUMINAIRE:       NEW 2X2 TROFFER WITH 3X3 LI-SS LOUVER,
1 COVER AND 2 BIAX LAMPS
TRIAD C240I120RH
0.58 AMPS  68.5 WATTS

CANDELA DISTRIBUTION                              FLUX
     0.0  22.5  45.0  67.5  90.0
 0  1841  1841  1841  1841  1841
 5  1835  1835  1836  1840  1840     175
15  1744  1751  1747  1696  1666     484
25  1589  1571  1452  1506  1552     707
35  1373  1299  1385  1592  1703     912
45  1104  1065  1357  1668  1853    1067
55   748   834  1115  1280  1415     952
65   233   321   407   316   255     347
75    27    32    30    30    29      34
85     4     5     6     6     5       7
90     0     0     0     0     0

ZONAL LUMEN SUMMARY
ZONE          LUMENS        %LAMP        %FIXT
 0- 30          1366         21.7         29.2
 0- 40          2277         36.1         48.6
 0- 60          4296         68.2         91.7
 0- 90          4683         74.3        100.0
90-180             0          0.0          0.0
 0-180          4683         74.3        100.0

TOTAL LUMINAIRE EFFICIENCY =          74.3 %
TOTAL REFLECTANCE OF PAINT =          90.0 %
CIE TYPE - DIRECT
PLANE              : 0-DEG  90-DEG
SPACING CRITERIA   :   1.2     1.4
SHIELDING ANGLES   :    23      23
PLANE              : 0-DEG  90-DEG
LUMINOUS LENGTH    :21.000  21.000

LUMINANCE DATA IN CANDELA/SQ M
ANGLE   AVERAGE AVERAGE AVERAGE
IN DEG   0-DEG  45-DEG  90-DEG
    45    5486.   6743.   9207.
    55    4582.   6830.   8668.
    65    1937.   3384.   2120.
    75     367.    407.    394.
    85     161.    242.    202.
```

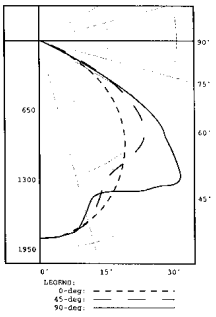


THIS REPORT IS BASED ON PUBLISHED INDUSTRY PROCEDURES • FIELD PERFORMANCE MAY DIFFER FROM LABORATORY PERFORMANCE

**coefficients of utilization — zonal cavity method**

| | RF | 20 | | | 20 | | | 20 | | |
|---|---|---|---|---|---|---|---|---|---|---|
| | RC | 80 | | | 50 | | | 30 | | |
| | RW | 70 | 50 | 30 | 50 | 30 | 10 | 50 | 30 | 10 |
| room cavity ratio | 1 | 82 | 79 | 77 | 75 | 73 | 71 | 72 | 70 | 69 |
| | 2 | 76 | 70 | 66 | 66 | 63 | 60 | 64 | 61 | 59 |
| | 3 | 69 | 62 | 57 | 59 | 55 | 51 | 57 | 53 | 50 |
| | 4 | 64 | 56 | 50 | 53 | 48 | 44 | 51 | 47 | 43 |
| | 5 | 59 | 50 | 43 | 47 | 42 | 38 | 46 | 41 | 38 |
| | 6 | 54 | 45 | 38 | 43 | 37 | 33 | 41 | 37 | 33 |
| | 7 | 50 | 40 | 34 | 39 | 33 | 29 | 38 | 33 | 29 |
| | 8 | 47 | 37 | 31 | 35 | 30 | 26 | 34 | 30 | 26 |
| | 9 | 43 | 34 | 28 | 32 | 27 | 24 | 32 | 27 | 23 |
| | 10 | 41 | 31 | 25 | 30 | 25 | 21 | 29 | 25 | 21 |

**visual comfort probability** (VCP) average 100 fc; reflectances 80/50/20

| room size | | ceiling height | | | | ceiling height | | | |
|---|---|---|---|---|---|---|---|---|---|
| W | L | 8.5 | 10.0 | 13.0 | 16.0 | 8.5 | 10.0 | 13.0 | 16.0 |
| 20 | 20 | 61 | 55 | 53 | 64 | 56 | 49 | 41 | 52 |
| 20 | 30 | 65 | 59 | 54 | 54 | 61 | 54 | 46 | 42 |
| 20 | 40 | 68 | 62 | 58 | 56 | 64 | 58 | 51 | 46 |
| 20 | 60 | 71 | 65 | 61 | 59 | 67 | 61 | 55 | 50 |
| 30 | 20 | 67 | 60 | 52 | 59 | 64 | 55 | 44 | 52 |
| 30 | 30 | 70 | 63 | 53 | 51 | 67 | 59 | 48 | 43 |
| 30 | 40 | 73 | 66 | 58 | 53 | 70 | 63 | 53 | 47 |
| 30 | 60 | 75 | 69 | 61 | 56 | 72 | 65 | 57 | 51 |
| 30 | 80 | 77 | 71 | 64 | 59 | 74 | 68 | 60 | 54 |
| 40 | 20 | 71 | 64 | 57 | 58 | 67 | 61 | 49 | 53 |
| 40 | 30 | 73 | 67 | 58 | 51 | 70 | 63 | 53 | 45 |
| 40 | 40 | 76 | 70 | 61 | 53 | 73 | 66 | 57 | 49 |
| 40 | 60 | 77 | 72 | 64 | 56 | 75 | 69 | 60 | 52 |
| 40 | 80 | 79 | 74 | 66 | 59 | 76 | 71 | 63 | 55 |
| 40 | 100 | 80 | 75 | 69 | 62 | 78 | 72 | 65 | 58 |
| 60 | 30 | 75 | 70 | 61 | 54 | 72 | 66 | 57 | 49 |
| 60 | 40 | 77 | 72 | 64 | 56 | 75 | 69 | 61 | 52 |
| 60 | 60 | 79 | 74 | 67 | 59 | 76 | 71 | 63 | 55 |
| 60 | 80 | 80 | 76 | 69 | 61 | 78 | 73 | 66 | 58 |
| 60 | 100 | 81 | 77 | 71 | 64 | 79 | 75 | 68 | 61 |
| 100 | 40 | 78 | 73 | 67 | 60 | 75 | 70 | 64 | 56 |
| 100 | 60 | 80 | 75 | 70 | 63 | 77 | 73 | 67 | 60 |
| 100 | 80 | 81 | 77 | 72 | 65 | 79 | 75 | 69 | 62 |
| 100 | 100 | 82 | 79 | 74 | 67 | 80 | 76 | 71 | 65 |

luminaries lengthwise

luminaries crosswise

## ORDERING INFORMATION **Explanation of Catalogue Number Example: DPA2G9LS2FT120SB**

| DP | A | 2 | G | 9 | L | S | 2 | FT | 120 | SB | |
|---|---|---|---|---|---|---|---|---|---|---|---|
| DEEPCEL PLUS 3″ PARABOLIC | BODY STYLE | FIXTURE WIDTH | CEILING TYPE | NUMBERS OF CELLS | LOUVER FINISH* | SINGLE ″V″ REFLECTOR | LAMP QUANTITY | LAMP/FIXTURE LENGTH | VOLTAGE | BALLAST TYPE | OPTIONS |
| Pre-anodized aluminum louver | A=Air Supply<br>S=Static | | G=Grid (Lay-in T-bar)<br>T=Slot grid or two-directional concealed T (see options) | 9=3 rows of 3 | L= Low Iridescence Semi-specular (standard)<br>P= Low Iridescence Specular<br>* See options and consult factory | | | FT=TT5<br>2U=1 5/8″U Lamp T8 (nominal 24″) | 120,277<br>347 | | Add appropriate suffix to catalogue no. |

| | <20THD† | <10THD† | |
|---|---|---|---|
| SB* | BH** | | 2 Lamp Elect. 40w TT5 |
| SO* | RO** | | 2 Lamp Elect. 31w T8 |
| PS | --- | | LOL T8 Dimming |
| PB | --- | | LOL TT5 Dimming |

* Instant Start Standard
**Rapid Start Standard

† % Total Harmonic Distortion

### OPTIONS/ACCESSORIES

**DRYWALL KIT**:For plaster frames, order Cat. No.: **FK92X2**
**INTERNAL INTERFERENCE FILTER**: Consult CFI Fluorescent representative.
**RADIO INTERFERENCE FILTER:** 120, 277 or 347 volt, 50 or 60 Hz. SUFFIX: **R**.

**EMERGENCY LIGHTING SYSTEM:** SUFFIX: **O**
Emergency battery pack with charger. (90 minutes at 20% of lumens for 1 lamp).
**LOUVER FINISH:** Low iridescence Semi-specular (standard).
For other finishes, consult factory.

**AIR PATTERN CONTROL AND AIR SLOT CLOSURE:** For horizontal and vertival air supply and to balance return.
SUFFIX: **S**
**BALLAST OPTIONS:** For other ballast options, consult ballast specification sheet (folio BA-1-02)

### SPECIFICATIONS

**PERFORMANCE:** In an installation of 2 lamp 40W luminaires in a room cavity ratio of 1, with reflectance of 80% ceiling, 50% wall, 20% floor, the C.U. shall not be less than .79. To prevent glare the VCP shall not be less than 76 either lengthwise or crosswise (at 100fc level) and the average brightness at 65° shall not exceed 3384 candelas per square meter. To control veiling reflections, luminaire output in the 30°-90° zone shall not be less than 70.8%.
**AIR HANDLING** (DPA only) side air passages for air supply or air return. Supply air is discharged vertically. Optional side closure strips. Air return is also provided through the lamp compartment through fixture body ends.

**MATERIALS: Chassis parts** are die-formed code gauge cold rolled steel. Housing is ribbed for rigidity with side rails hemmed over and housing ends turned-in for safe handling. **Louver** is pre-anodized aluminum (Coilzak® or equal).
**FINISH: Chassis exterior**–black baked polyester enamel. **Cavity**– white baked polyester enamel minimum 86% reflectance. Phosphate undercoating. **Louver**–low iridescence semi-specular anodized vertical grain aluminum reflector sheet is standard.
**ELECTRICAL:** Thermally protected class "P" ballast C.B.M. approved, non PCB. If K.O. is within 3" of ballast, use wire suitable for at least 90°.
**LABELS:** I.B.E.W. UL and ULc Listed.

We reserve the right to change, materials and finish in any way that will not alter installed appearance or reduce function and performance.

CFI FLUORESCENT
CANLYTE
525 EDUCATION RD., CORNWALL, ONTARIO K6H 6C7
TEL.: (613) 938-6221 • FAX: (613) 938-0961